LS2720,1,3,4,5,8NYL,NYLAB
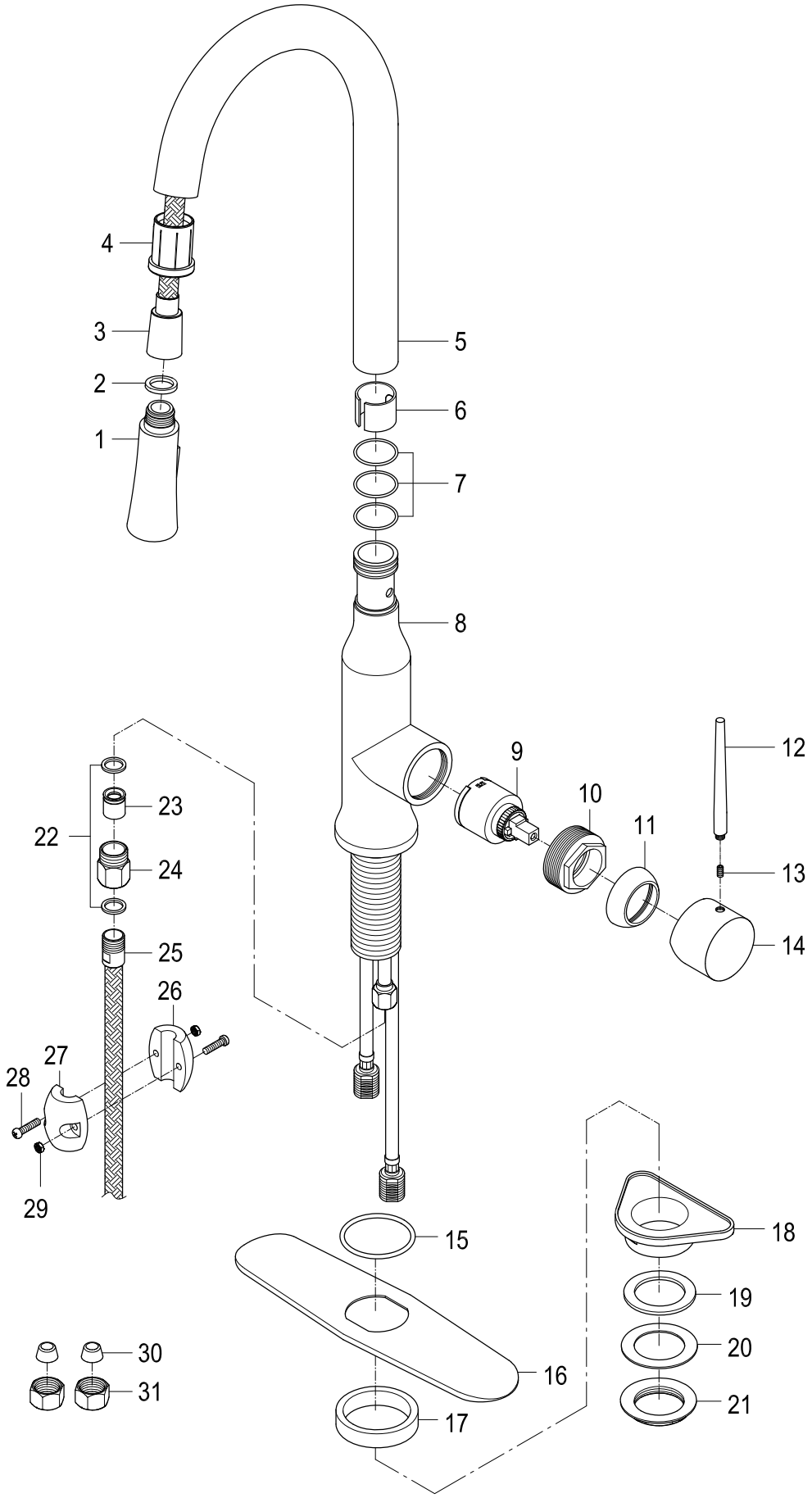
Single Handle Pull-Down Kitchen Faucet